AES 7207 RF Extender

Installation and Operation Manual



AES Corporation
285 Newbury Street
Peabody, MA 01960 USA
Tel (978) 535-7310 • Fax (978) 535-7313
www.aes-corp.com
Copyright © 2023 AES Corp. All Rights Reserved

Part No. 40-7207 Rev. A1, 3/18/2024

THIS PAGE
DELIBERATELY BLANK

Table of Contents

Safety Considerations **4**
1. Technical Specifications **4**
2. Pre-Installation **5**
2.1 Equipment List 5
2.2 Mounting 5
RF Extender Location 5
Antennas 5
2.3 Requirements 5
Environmental 5
Electrical Supply 5
Power Options 5
Battery Size 6
3. Installation **6**
Water Damage Prevention 6
Mounting the Enclosure 6
Removing the Mainboard 7
Installing Transceivers 7
4. Wiring **8**
4.1 Primary Power Wiring 8
Plug-In Transformer 8
4.2 Secondary Power Wiring 9
Battery Connection 9
Battery Replacement 9
Battery Only Restart 9
Battery Supervision 9
5. Compatibility and System Configuration **9**
Compatibility 9
System Configuration 10
Trouble Output 10
View 7207 RF Extender Software Version 10
Status LED Indicators 10
LCD Front Panel Display System Messages 10
Display Operation 10
System Display and 7207 Version Number 10
Power Status 11
Traffic indicators 11
Off-Normal Operation 12
Fault Display 12
6. System Firmware **13**
Restart System 13
7. Testing **13**
8. Maintenance **13**
9. Troubleshooting **13**
10. Repair Information **13**

11. Battery Replacement Instructions 13
12. AES Corp. Contact Information 14
13. Warranty 15

Safety Considerations

Warning! RF Extender antenna or other cables that come in contact with electrical power lines may result in **DEATH** or **SERIOUS INJURY**.

Warning! Do **NOT** install the RF Extender unit or antenna during a lightning storm.

- Equipment must be installed in accordance with the National Electric Code, NFPA 70, NFPA 72, local building codes, and any specific requirements of the Authority Having Jurisdiction (AHJ).
- External Antenna requires: Ground the antenna, the 7207 RF Extender enclosure, and any surge protector devices to help dissipate surges away from equipment and personnel. Antenna grounding and surge protectors should not be neglected; they are for your safety and the safety of your equipment.
- Periodically test the system for proper operation. AES assumes no responsibility for the equipment's failure to operate. AES's sole responsibility is to repair or replace any AES device found to be defective during the warranty period.
- Exposing the RF Extender electronics to water or moisture environments, such as rain, shower, bath, pool, sauna, etc., can cause damage and unexpected operation.
- Avoid dropping or exposing the unit to physical impact that could damage the enclosure or internal components.

1. Technical Specifications

Power Supply

Source	Requirements
External Class 2 AC Transformer and Rechargeable Backup Battery in 7207	Transformer Voltage/Frequency: 120 V AC 60 Hz Input Current: 1.9 A max. current (40 VA min.) Input Voltage: 16.5 V AC Nominal 12 V DC – Lead Acid Gel Cell –7.5 Ah

Note: All Circuits are Power Limited except for Battery Leads.

Current Consumption

7207 – Standby w/o backup battery: 210 mA (940 Transmitting)
7207 – Standby w/ charged backup battery: 230 mA (960 Transmitting)
7207 – Standby + charging backup battery: 890 mA (1.64 A Transmitting – Maximum)

Environmental Specifications

Operating Temperature: 32°F to 120°F (0°C to 49°C)
Storage Temperature: 14°F to 140°F (–10°C to 60°C)
Relative Humidity: 0 to 93% RHC, non-condensing

Mechanical Specifications

Dimensions: 13 in. H × 10 in. W × 4.5 in. D (33 cm × 25.5 cm × 11.4 cm)
Weight: 9.7 pounds (4.4 kilograms) without battery
Enclosure Material: 60 mil CRS Steel
Finish Color: RAL 5003- Blue

Reporting/ Local Annunciation
AC Failure (low primary AC voltage limit: 96 V AC) Low Battery (low battery voltage limit: 11.6 V DC) Battery Charger Failure
Transceiver
Output Power: 2 Watts or 5 Watts Model of Transceiver: 7085-UE5 or 7085-VE5 Frequency Range: UHF/VHF Bands Need to set to authorized frequency.

2. Pre-Installation

2.1 Equipment List

The following materials are available out of the box:

- Enclosure with key lock and two keys
- 7207 RF Extender Main Circuit Board Assembly
- Pair of 7085UE5 2-Watt Transceiver set to authorized frequencies
- Pair of 7214 Case Top Flexible Tamper Resistant Antennas with cable assembly
- 40-7207-QSG Model 7207 Quick Start Guide

2.2 Mounting

RF Extender Location

Important! A fire alarm installation that complies with UL 864 using the 7207 RF Extender must be located where a NetCon of 5 is present. A check of the location can be done with the AES Network Connectivity Tool (NCT). The AES NCT provides a quick means for verifying NetCon or finding suitable locations for RF Extender installation.

Antennas

Two Case Top Flex Tamper Resistant Antennas are supplied with the 7207 and mount on top of the enclosure. An optional side knock out is available for mounting one antenna horizontally if desired.

2.3 Requirements

Environmental

Select an installation location that meets the Environmental Specifications described in the **Technical Specifications** section on page 4.

Exposing the RF Extender to temperatures below 32°F (0°C) or above 122°F (49°C) can damage the backup Gel-Cell battery. Exposure to extreme temperatures can cause unexpected operation of the RF Extender electronics.

Exposing the RF Extender electronics to water or moisture environments (rain, shower, bath, pool, sauna, etc.) can cause damage and unexpected operation.

Electrical Supply

Connect to an outlet on a dedicated branch circuit that is *not* controlled by a switch. Refer to the **Power Options** section.

Power Options

The following wiring diagram shows two options to supply the RF Extender with power using plug in class 2 transformer or UL 864 listed 24VDC power supply.

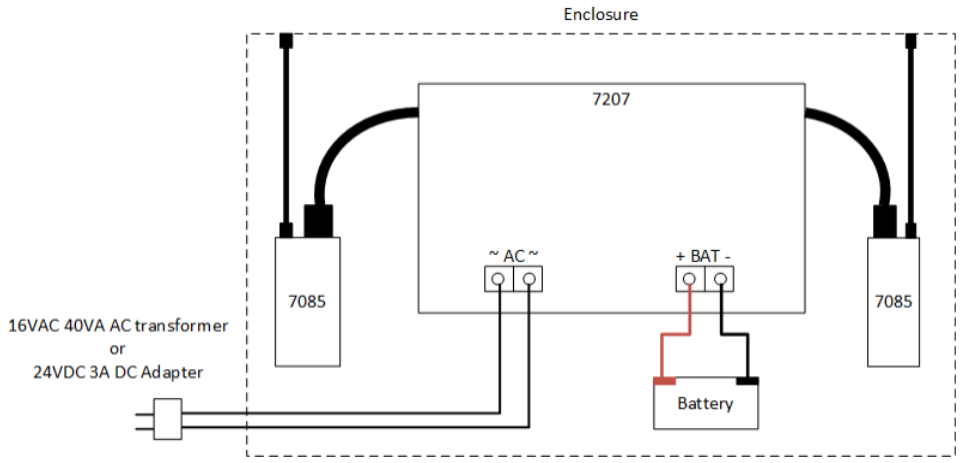

Battery Size

Battery size requirements are listed in the following table:

Table 1. Battery Size Requirements

System Configuration Description	Current (mA)	Battery Size (12 V)
7207	See Current Consumption under Technical Specifications on page 4	7.5 Ah

3. Installation

Warning! Do **NOT** install the RF Extender unit during a lightning storm.

Important! Verify AES mesh network connectivity for the RF Extender before installing the RF Extender enclosure.

Important! A high chance of RF cross talk interference is possible when Extenders are on the same frequency and installed at a 1/4 mile or less distance from each other. Request an alternate transceiver frequency for this install situation by contacting AES Customer Support or Sales.

Water Damage Prevention

To prevent water damage, take the following precautions when mounting the unit:

- Avoid mounting directly on exterior walls, especially masonry walls (condensation).
- Avoid mounting directly on exterior walls below grade (condensation).

Important!
Protect unit from plumbing leaks.
Protect unit from splash caused by sprinkler system inspection ports.

- Avoid mounting in areas with humidity-generating equipment (such as dryers or production machinery).

Important! Route conduit to prevent moisture in the conduit from entering the RF Extender.

Mounting the Enclosure

Check the Environmental Requirements on page 5 before starting. Mount in an area that is secure, as well as accessible for service and testing. When mounting on an interior wall, use anchors and fasteners appropriate for the wall material and total weight of RF Extender and battery.
When mounting on a concrete wall, the unit must be placed to prevent moisture or water from entering the enclosure. Use standoff material attached to the concrete surface to mount the enclosure. Two keyhole and two circular mounting holes are available. Refer to the diagram below for location and sizes of mounting hole.

Dimensions

D1	D2	D3	D4	D5
13 in (33 cm)	4.5 in (11.4 cm)	7.75 in (19.7 cm)	11.5 in (29.2 cm)	10 in (25.4 cm)

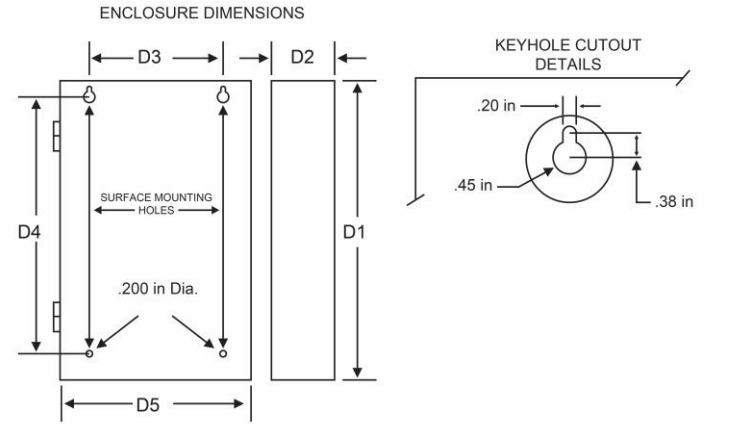

Figure 1. Enclosure Mounting – Hole Location and Sizes

Important! Use knockout plugs to close any unused conduit holes in the enclosure.

To remove electronic boards mounted in the enclosure, perform the following steps for boards installed.

Removing the Mainboard

With all mounted boards removed from the top of the mainboard, remove the remaining hex nuts or standoffs holding the mainboard to the enclosure.

1. Grasp the board on each side, and pull straight upward to lift the card off the mainboard support standoffs attached to the enclosure

Installing Transceivers

Extender has 2 transceivers shipped in package. (Both set for UHF) *This is for communication between extender and subscriber on premise. Communication to mesh network will be determined by radio on existing subscriber on premise.

Step 1: Take one of provided transceivers and install on inside of extender box - **left hand side**

Transceiver on left is communicating to subscriber on premise.



Step 2: The alternate transceiver needs to installed in subscriber on premise that will be communicating to extender
Step 3: Transceiver that is in subscriber box being replaced by extender transceiver will be then installed on inside of extender box - **right hand side**.
Step 4: Install Rubber Deck Antennas
Step 5: Apply jumper cables and check connections are tight

***VHF Subscriber Additional Step**

If subscriber communicating to extender is on VHF network. There is alternate antenna being utilized on subscriber that needs to be swapped on site as well.

Step 4: After completing steps 1-3 above, take single antenna from extender and replace antenna on subscriber.

Step 5: Take antenna that was taken off subscriber and place on top right side of extender enclosure

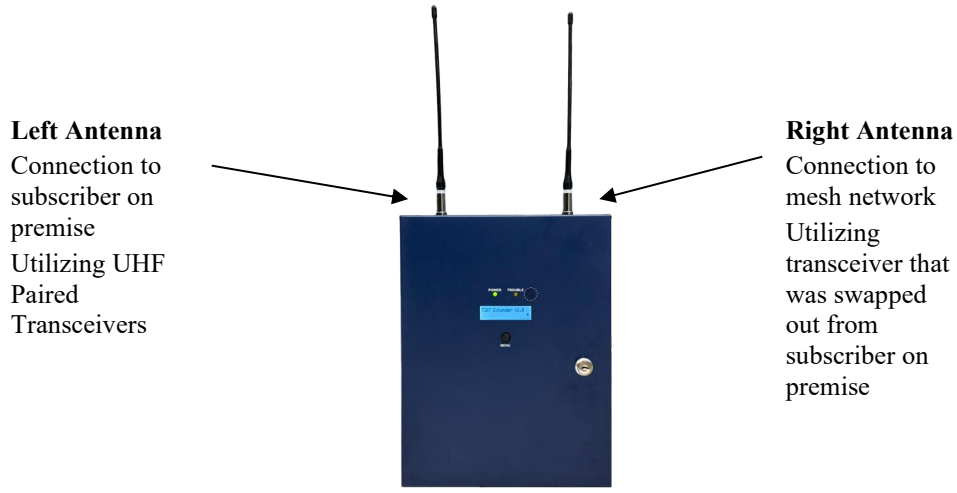

Step 6: Install other loose antenna from package on top left side of extender enclosure

Step 7: Apply jumper cables and check connections are tight

4. Wiring

4.1 Primary Power Wiring

Plug-In Transformer

Warning! Turn off or disconnect all power before attempting to connect the 7207 RF Extender. Do **NOT** apply power until all accessories are properly connected.

For U.S. installations, use only one of the Class 2 Direct Plug-in Transformers listed below

Manufacturer	Model	Rating
ELK	ELK-TRG1640	16.5 V AC, 45 VA
MG Electronic Sales	MGT1640	16.5 V AC, 40 VA
AES Corp.	1640	16.5 V AC, 40 VA
Any UL 864 listed PS that meets the rating column of this table		

Refer to the wiring diagram for connection details, as well as for routing the battery, enclosure mounted antennas, antenna cables and the transceiver control cable.

A ¼ inch minimum of spacing is required between non-power limited (battery wiring) and power limited wiring as shown in the photo below and in the diagram below.

4.2 Secondary Power Wiring

Battery Connection

Place the battery in the RF Extender enclosure with the battery quick-connect terminals located to the right side of the enclosure (refer to Figure 2, Wire Separation - Non-Power Limited and Power Limited Circuits on page **Error! Bookmark not defined.**).

The following steps and diagram below explain how to connect the backup battery.

1. Connect the BLACK wire from J5 (+BAT-) to the negative (–) side of the battery.
2. Connect the RED wire from J5(+BAT-) to the positive (+) side of the battery.

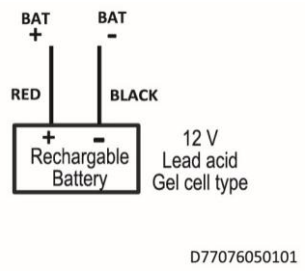

Figure 2. Connecting the Backup Battery

Battery Replacement

The battery should be replaced every 3 years or when testing indicates replacement is required. Replace with the same size and type installed. See Battery Replacement Instructions on page XX for details.

Battery Only Restart

The 7207 RF Extender without AC power (for test or diagnostic purposes) will power up and self-test with only the battery connected.

Battery Supervision

When AC power is present, the battery is tested at approximately 30-second intervals

When the battery voltage is below 11.6 V DC for two consecutive test intervals, trouble LED will blink and annunciator will chirp until you replace battery or silence button on cover.

Replacing a low-charge battery with a fully charged battery may result in the RF Extender not immediately detecting the charged battery. Due to the test cycle time, up to 60 seconds can pass before the fully charged battery is recognized.

5. Compatibility and System Configuration

Compatibility

All AES products are compatible and have been tested to be compliant with UL 864 and UL 2610 are limited to the following:

Model Number	Type
7744F	Fire
7788F	Fire

7706 ULF	Fire
7707	Fire
7007	Burg
7177	Hybrid
7170	IP Link

System Configuration

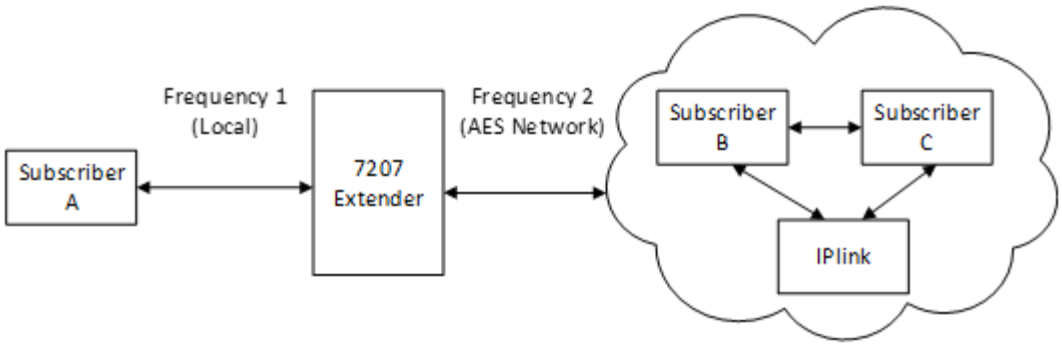

Figure 3.

Trouble Output

- Annunciator – An integrated onboard annunciator on the front enclosure cover.

View 7207 RF Extender Software Version

The 7207 software version is visible in the LCD.

Status LED Indicators

Power LED – Indicates power on

Trouble LED – Blinks when battery, power, charger fault present

Traffic LEDs – Visible on main board with door open. Green LEDs indicate packet receive; yellow LEDs indicate packet transmit.

LCD Front Panel Display System Messages

Display Operation

The 7207 RF Extender uses a combination LCD display and a **MENU** pushbutton switch to navigate through the system message screens.

Note: Pressing and releasing the **MENU** button allows you to toggle through the display screens.

System Display and 7207 Version Number

When the Model 7207 is operating normally, the Normal System Status screen is shown in the LCD. The model number and software version number are displayed as shown below:



UHF

.

Power Status

Press the **MENU** button to view the power status.



In this case, MAIN power is not connected.

Traffic indicators

Step 1:

Packet traffic is shown on the LCD as below:



Packet from local radio to AES network: `OUT -------->>>`
Packet from AES network to local radio: `IN <<<--------`

In addition to the LCD, there are LEDs on the **main board inside the enclsoure** that indicate traffic activity. The green LEDs indicate reception of a packet and the yellow LEDs indicate transmission of a packet. The blinking red LED indicates the 7207 firmware is running.

Step 2:

Login to Subscriber connected to panel and verify peers list is being populated. Confirm there is no NetCon fault and at least 2 paths are present.

Additionally, you can trigger a zone at Panel or FACP and validate at central station signal has been received.

Off-Normal Operation

Faults that cause off-normal operation are shown with fault messages in the LCD display. See table below for more information.

Table 2. Faults and Alarms with Off-Normal Operation

Off-Normal Condition Fault Message	Problem
AC POWER FAIL	AC power to RF Extender disconnected or below minimum voltage
CHARGER FAIL	Battery charger failure
BATTERY FAIL	Backup battery voltage below minimum

Fault Display

Faults are shown on the LCD display on the enclosure by pressing the MENU button along with a blinking yellow LED and chirps from the annunciator.



When the fault condition clears, the cleared fault message no longer displays and the buzzer stops sounding.

- **Buzzer Silence –** Press the **MENU** button and *hold down* for at least 5 seconds. The status display will show the following, and the buzzer will be silenced.

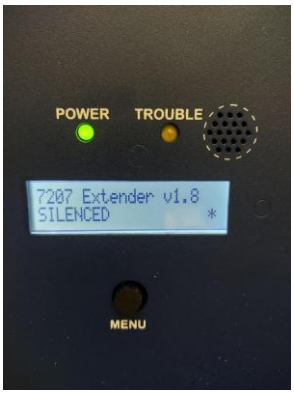

- **Buzzer Silence –** Press the **MENU** button and *hold down* for at least 5 seconds.

6. System Firmware

Restart System

Clicking the **Reset** button causes the RF Extender to halt communication and any system software that may be running. The system software restarts and the RF Extender resumes communication.

7. Testing

Some of the tests to be performed at the installation site require a response from a person at the central station:

- Trigger alarm conditions: Confirm that the proper message is received at the Central Station.
- Cause fault conditions: Confirm that the proper message is received at the Central Station.

8. Maintenance

Once installed and normal operation is confirmed, minimal maintenance is required. Batteries should be periodically tested to be certain they have sufficient capacity to operate the system.

9. Troubleshooting

The most common causes of an RF failure or trouble are due to:

- Antenna type
- Antenna location
- Coaxial cable
- Coaxial connectors
- Transceiver malfunction

Antennas close to metal or conductive material that block or reflect the transmitted signal are the most common problems.

Try different locations for the antenna or use a remotely mounted long-range RF antenna. Try replacing the transmission components, including the coaxial cable, coaxial connectors, or antenna.

Note: No user serviceable components are located on the circuit boards. Defective circuit board units must be returned to AES. For information on returning units, see the AES Service Procedure under **Warranty** on page 15.

10. Repair Information

Other than the backup battery, no user serviceable parts are located in the 7207 RF Extender.

11. Battery Replacement Instructions

2. Remove the positive battery lead (red) from the battery.
3. Remove the negative battery lead (black) from the battery.
4. Verify that the POWER LED indicator is NOT illuminated.

5. Remove the battery from the enclosure.
6. Discard the battery in accordance with local disposal codes.
7. Install the new battery into the enclosure.

   Note: Observe ¼ in. minimum separation between non-power limited wiring and power limited wiring.

8. Connect the negative battery lead (black) to the battery.
9. Connect the positive battery lead (red) to the battery.
10. Perform RF Extender power-up and self-test procedure.

12. AES Corp. Contact Information

AES Corporation

285 Newbury Street
Peabody, Massachusetts 01960 USA
Website: http://www.aes-corp.com
AES corporate Phone: (800) 237-6387 (800) AES-NETS
USA (978) 535-7310
Fax: USA (978) 535-7313
Email: Check Website for latest email addresses

13. Warranty

LIMITED PRODUCT WARRANTY

AES warrants to the original purchaser that the AES Subscriber Unit will be free from defects in material and workmanship under normal use and service for one year from the date of original purchaser's purchase. Except as required by law, this Limited Warranty is made only to the original purchaser and may not be transferred to any third party.

This Limited Product Warranty is made in lieu of any other warranties, expressed or implied, it being understood that all other warranties, expressed or implied, inclusive of merchantability or fitness for a particular purpose, are hereby expressly excluded.

AES assumes no liability for any personal injury, property damage, consequential damages, or any other loss or damage due, among other things, to this product's failure to operate or provide adequate warning. AES's sole responsibility is to repair or replace, at AES's sole option, the AES product that is judged defected by AES during the limited warranty period under the terms of its Limited Warranty.

TECHNOLOGY LICENSE

Certain AES Products include software, protocols and other proprietary and confidential technology and trade secrets of AES which are incorporated in or provided with AES Products solely for use in conjunction with and in order to operate AES Products ("Licensed Technology"). AES grants the original purchaser a non-exclusive license to use such Licensed Technology solely in connection with the use and operation of AES Products and for no other purpose or use whatsoever. No title or ownership in or to any such Licensed Technology is conveyed by the sale or delivery of any AES Products; all such rights are retained by AES.

AES SERVICE PROCEDURE: Contact AES by Phone (978) 535-7310, Fax (978) 535-7313 or Email service@aes-corp.com, to receive a Return Material Authorization Number. Have the AES part number and serial number ready. Repack equipment in original or equivalent packaging. Inside the box, please include a contact name, telephone number, address and a brief description of the reason for return.

Ship items freight-prepaid to:

Repair Services, RMA#_____
AES Corporation,
285 Newbury Street
Peabody, MA 01960 USA

(Contact AES for Return Material Authorization number.)

Rev Control

Doc Rev	Description	Stakeholder	Date
40-7207 Rev A	Introduce Manual	JDM	12/18/23
40-7207 Rev A1	Added Compatibility Chart and LED on boards functionality	JDM	3/19/24